Product Data Sheet

GW62224H

IEC 309 HP range

IEC 309 HP: range of plugs and socket-outlets complying with the safety requisites defined by the international Standards IEC 60309-1 and IEC 60309-2 and assimilated at European level as EN 60309-1 and EN 60309-2. This range expands GEWISS's assortment from 16A to 125A straight plugs, straight connectors and 10° flush-mounting socket-outlets with IP44/IP54 and IP66/IP67/IP68/IP69 degrees of protection to ensure full protection for all applications. The technopolymers and thickness used for the parts made of insulating material guarantee an elevated degree of mechanical and chemical agent resistance. All the sleeves and pins of the IEC 309 HP socket-outlets and plugs are surface-treated with nickel-plating to ensure full protection against corrosion, oxidation and abrasion. All the external metallic elements of the IEC 309 HP plugs and socket-outlets are made of stainless steel (the threaded metallic inserts for the body-grip coupling of the 63-125A versions are made of brass).

Colour	Yellow	Rated current (A)	16
IP degree	IP66/IP67	No. of poles	2P+E
Mechanical resistance	IK09	Reference h	4
Flange dimensions (mm)	85x75	Type	10° angled flush-mounting socket-outlet
Rated voltage	100 - 130 V	Frequency	50/60 Hz
Terminal tightening capacity	1-2.5mm² flexible cables - 1.5-4mm² rigid cables	Operating temperature	-25 +55 °C
Type of wiring	With screw	Type of material	Halogen-free in compliance with EN 60754-2
Electrocod	2210	Glow wire test	850 °C (active parts) - 650 °C (passive parts)
Total number of operations	> 5000	Permissible overload	22 A
Breaking capacity at 1.1 Un	20 A	Insulation resistance	> 10 MΩ
Thermo-pressure with ball	125 °C (active parts) - 80 °C (passive parts)		

BEHAVIOUR WITH CHEMICAL AND ATMOSPHERIC AGENTS

Saline solution	Acids		Bases		Solvents				Mineral oil	UV rays
	Concentrated	Diluited	Concentrated	Diluited	Hexane	Benzol	Acetone	Alcohol		
Resistant	Not resistant	Limited resistance	Limited resistance	Resistant	Resistant	Resistant	Resistant	Resistente	Resistant	Resistant

DIMENSIONAL

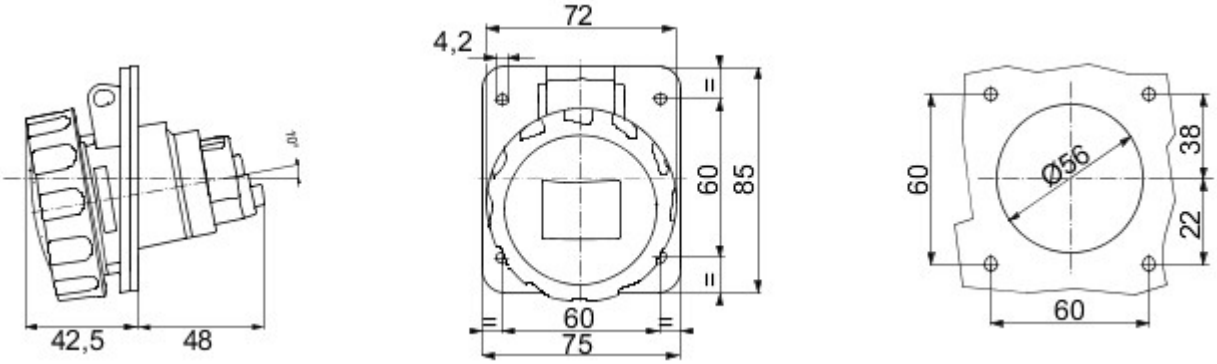

TECHNICAL SYMBOLOGY

IP66/IP67 | IK09 | -25 +55 °C | With screw | Halogen-free in compliance with EN 60754-2 | 850 °C (active parts) - 650 °C (passive parts) | 125 °C (active parts) - 80 °C (passive parts)

STANDARDS/APPROVALS

GEWISS S.p.A. Via A. Volta, 1
24069 Cenate Sotto - Bergamo - Italy
tel. +39 035 94 61 11 fax +39 035 94 69 09

www.gewiss.com
sat@gewiss.com
Last update 10/10/2020

Data, measures, designs and pictures are shown only as informative purposes, and could be changed without previous notice